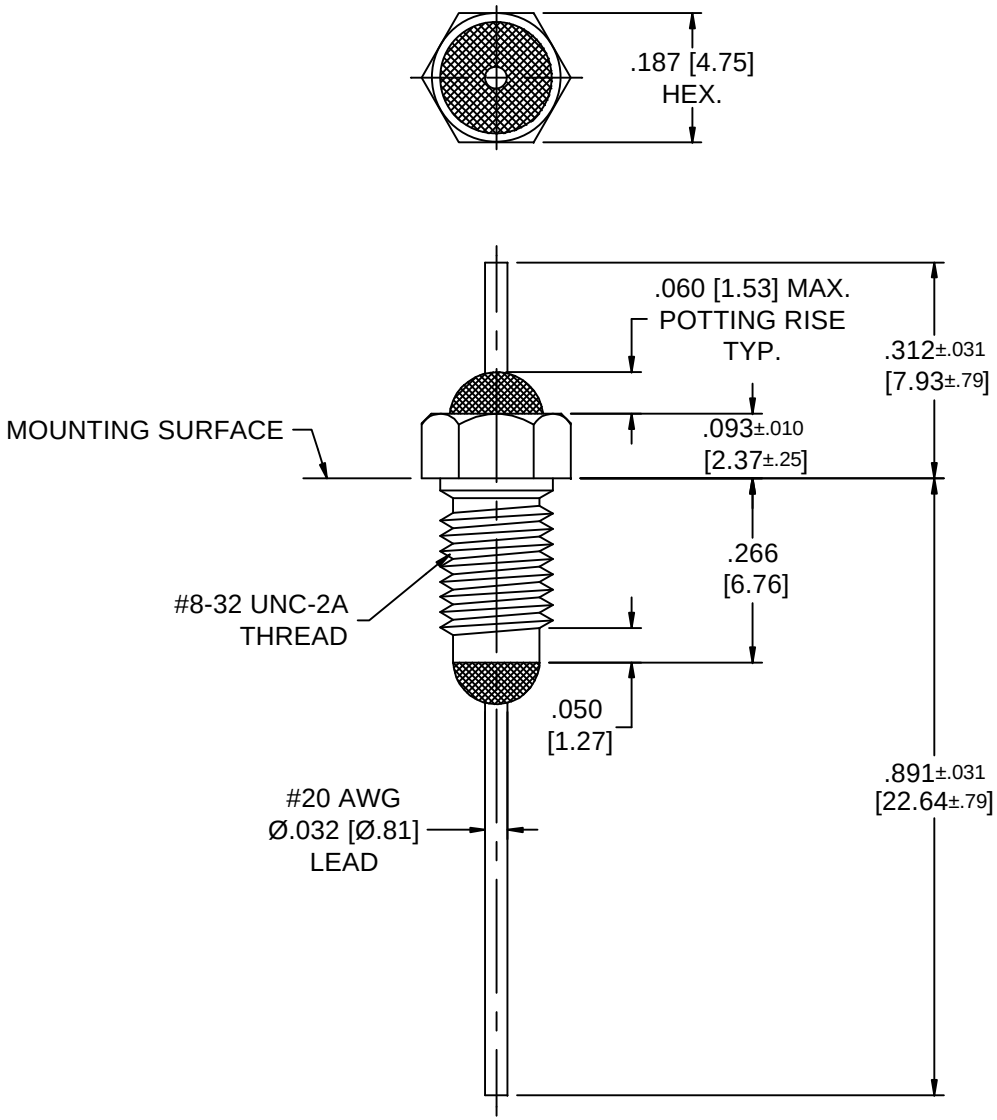

LEAD FINISH	SILVER
BUSHING FINISH	SILVER
05 CAPACITANCE	3000pF MIN.
TEMP. RANGE	-55°C TO +125°C
CURRENT	10 AMPS MAX.
WORKING VOLTAGE	125°C 200 VDC
DC RESISTANCE	.01 Ohms MAX.

I.L. PER MIL-STD-220 @ 25°C (NO LOAD)

FREQ.	I.L. (dB)
10 MHz	5
1 GHz	65
10 GHz	70
100 GHz	45

SCHEMATIC

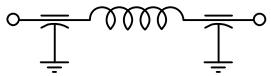

MARKING:

PART: FS003

BAG PACK : SCI 1250F-003
DATE CODE
LOT NO.
QTY / BAG (200 MAX.)

NOTES:
1. MAX INSTALLATION TORQUE: 4in-lbs.
2. HARDWARE IS INCLUDED.
3. THIS IS A LEAD FREE PART.
4. MAX REFLOW IS 245°C FOR 5 SEC.

RoHS compliant

REV. NO.	CHANGE NOTICE
05	CN 46959-ENG
04	CN 41978-ENG
03	CN 30491-CPD
02	CN 26708-CPD
01	CN 22179-CPD
00	CN 18174-CPD

UNLESS OTHERWISE SPECIFIED DIMENSIONS ARE IN INCHES [MILLIMETERS]

DO NOT SCALE

THIRD ANGLE PROJECTION

TOLERANCES UNLESS OTHERWISE SPECIFIED
Dec. .x ±
Dec. .xx ±
Dec. .xxx ± .010 [.25]
Angles ± 0° 30"

CODE IDENT. NO. 0LSP2

SPECTRUM CONTROL INC.

FAIRVIEW PENNSYLVANIA

Dwn. KNOWLTON
Date 5-21-08
Engr. B.Devine
Sheet 1 of 1

Description: FILTER, SING, Pi, BUSHING

1250F-003

Quality Products From The Specialists In Electro—Magnetic Compatibility