CASE FINISH	CURRENT (AMPS)	WORKING VOLTAGE				MAXIMUM DC RESISTANCE (OHMS)	MAXIMUM VOLTAGE DROP		MINIMUM CAPACITANCE (uF)	MIN. INSERTION LOSS PER MIL-STD-220, FULL LOAD, +25°C												
		-55°C TO +85°C		-55°C TO +125°C																		
		AC	DC	AC	DC		DC	AC		14 KHz	30 KHz	50 KHz	75 KHz	100 KHz	150 KHz	300 KHz	500 KHz	1 MHz	10 MHz	100 MHz	1 GHz	2 GHz
SOLDER	3.0	125	150	125	150	--	.15	---	---	--	--	--	8	--	13	20	--	35	70	--	70	--

PART MARKING:

API 51-353-113
DATE CODE
28

PACKAGE MARKING:

STANDARD

MARKING NOTES:

N/A

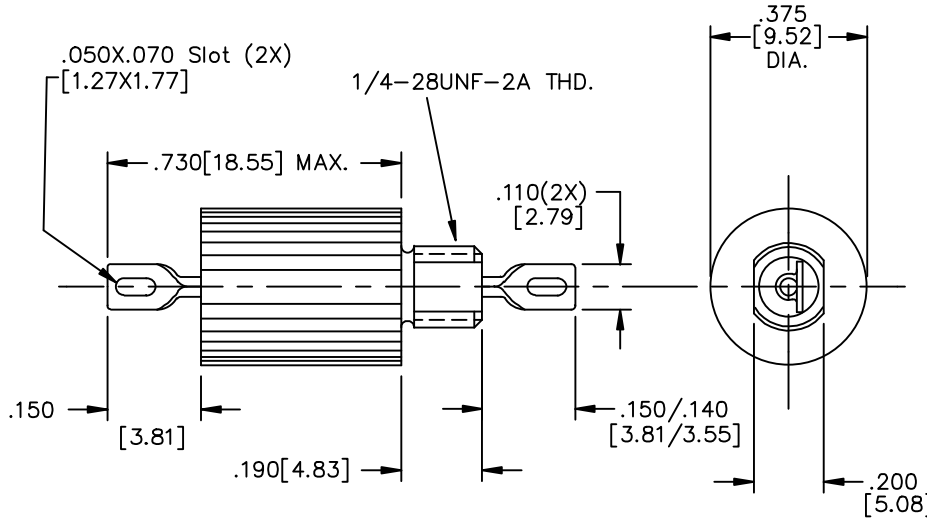

SCHEMATIC

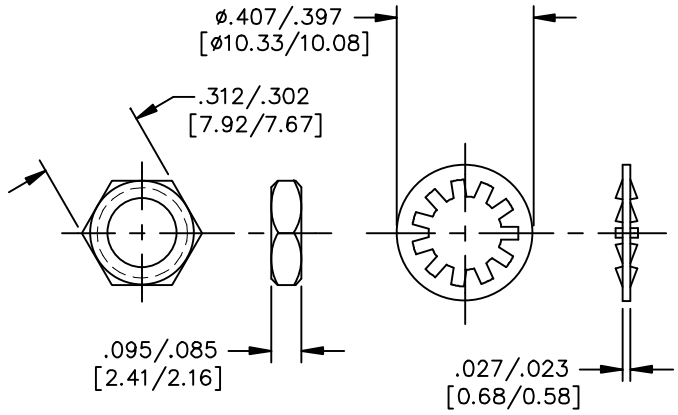

MTG. HARDWARE

NOTES:

1) MOUNTING TORQUE NOT TO EXCEED 7in-lbs.

REV. NO.	CHANGE NOTICE
28	CN #15924
27	CN 183055

UNLESS OTHERWISE SPECIFIED DIMENSIONS ARE IN INCHES. [MILLIMETERS]

DO NOT SCALE.

TOLERANCES UNLESS OTHERWISE SPECIFIED
Fractions ±
Dec. .xx±
Dec. .xxx± .010
Angles ±0° 30'

CODE IDENT. NO. OLSP2

api technologies corp.

FAIRVIEW PENNSYLVANIA

Dwn. SLAGLE
Ckd. 9-30-15
Sheet 1 of 1

Description Low Pass EMI Filter

51-353-113

Quality Products From The Specialists In Electro-Magnetic Compatibility