NOTES:
1. SUGGESTED MOUNTING HOLE = ø.147±.001
2. MAX REFLOW IS 245°C FOR 5 SEC.

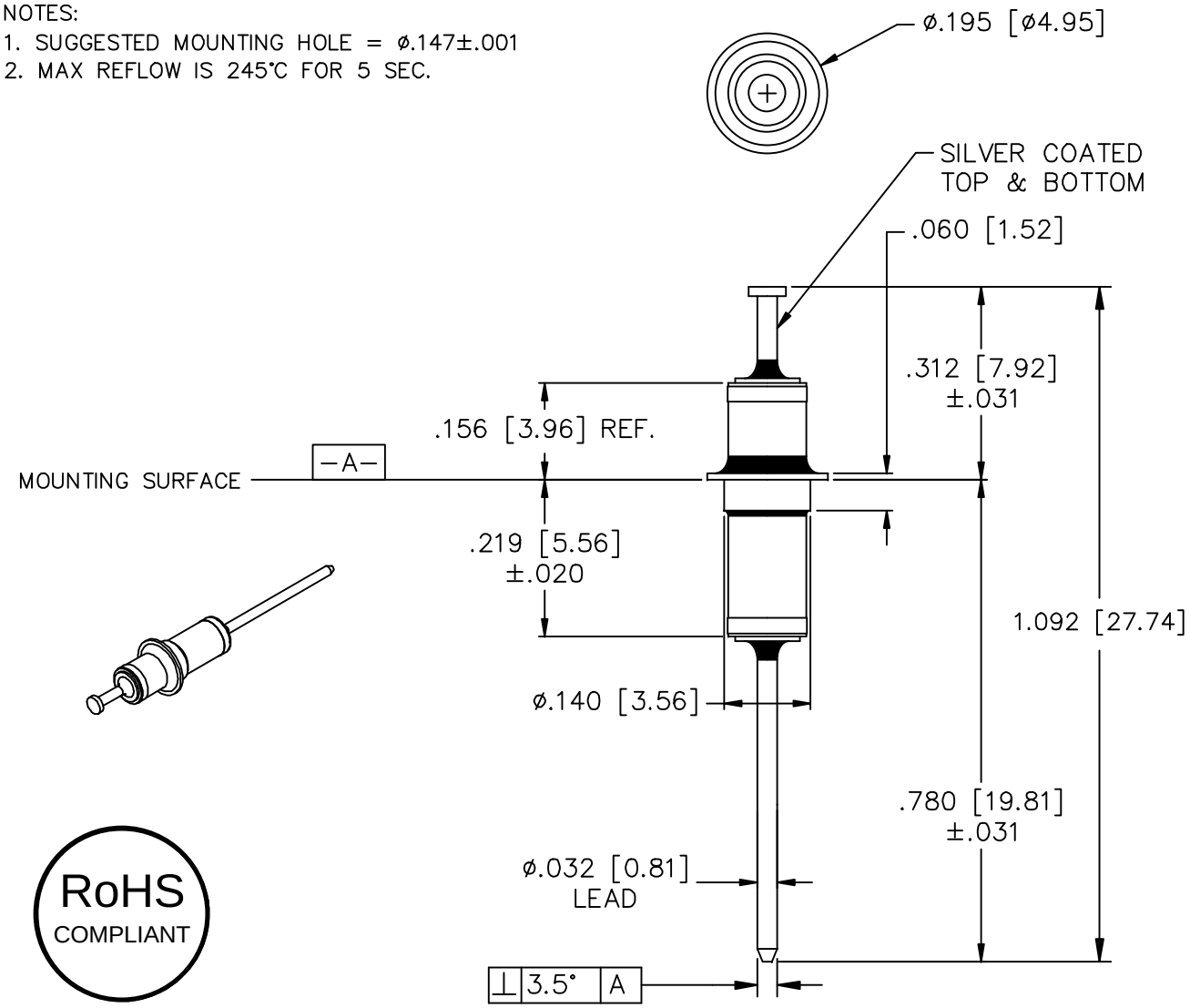

RoHS COMPLIANT

LEAD FINISH:	SILVER
EYELET FINISH:	SILVER
CAPACITANCE	22nF GMV
TEMP. RANGE	-55°C TO 125°C
CURRENT	10 AMP MAX.
WORKING VOLTAGE	85°C -- VDC MAX. 125°C 70 VDC MAX.
D.C. RESISTANCE	.01ohms MAX.

MIN. I.L. PER MIL-STD-220 AT 25°C NO LOAD

FREQ. MHz	I.L. (db)
1	7
10	25
30	60
100	70
300	70
1 GHz	70

SCHEMATIC

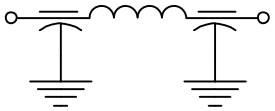

MARKING:

PART: NONE
BAG:
51F-750-302
DATE CODE
QTY./BAG (200 MAX.)

REV. NO.	CHANGE NOTICE
03	CN #25162 REDRAWN
02	CN 30515-CPD
01	CN 26049-CPD
00	CN 18049-CPD

TOLERANCES UNLESS OTHERWISE SPECIFIED
Fractions ± 1/64
Dec. .xx±
Dec. .xxx± .005
Angles ±0° 30'

CODE IDENT. NO. 0LSP2

api technologies corp.
FAIRVIEW PENNSYLVANIA

Dwn. KNOWLTON
Date 3-28-17
ENGR. B.DEVINE
DO NOT SCALE

Description
SOLDER MNT. FILTER

51F-750-302